HPM410-DP Submersible Level Transmitter

(Large range)

Nanjing Hangjia Electronic Technology Co., LTD.

Overview

HPM410-DP large-range submersible level transmitter features a fully sealed submersible structure. This transmitter utilizes a pressure sensor that has undergone long-term stability and reliability testing, along with a high-precision signal conditioning circuit, all housed in a stainless-steel casing. This integrated structure and standardized signal provide convenience for field use and automated control. A dedicated cable is sealed to the casing, allowing for long-term immersion in liquids compatible with the transmitter's structural materials. The casing employs a fully welded process, and multiple layers of reliable sealing are incorporated into the connections of the casing, cable, and other components. The internal components are fully potted, ensuring a long service life. An optional anti-drag cable with built-in steel wire rope is available for enhanced tensile strength.

HPM410-DP large-range submersible level transmitter features a large measurement depth, small size, and ease of use. It is suitable for water level measurement and control in lakes and oceans, deep wells, and hydrological exploration.

Features

- Wide range, from 200 meters to 2000 meters
- Integrated submersible structure, 25mm diameter, easy installation
- Multiple protection and sealing structure design, IP68 rating
- Dual anti-condensation and anti-condensation technology
- Full welding process
- Core welding process, no sealing ring, low risk of leakage
- Optional lightning protection

Applications

- Lakes
- Oceans
- Deep Wells
- Hydrological Exploration
- Marine Equipment

Technical Parameters

Pressure Range	0~200...2000mH_2O Note: Measurement units can be converted to ftH_2O@4℃, inH_2O@4℃, m, mm, etc. Gives the density value of the measuring medium when the unit is m, mm, etc.
Overload	1.5 times pressure range of full scale
Measuring Medium	various liquids compatible with contact material
Output Signal/Power Supply(option1)	2-wire 4~20mA / Vs=8~30V

Output Signal/Power Supply(option2)	4-wire Modbus-RTU/RS485 / Vs=10~30V (The length of the cable must be less than 1200 meters)
Accuracy	±0.5%FS (typical, @25℃), ±0.2%FS (optional, @25℃)
Long-term Stability	±0.3%FS/year (0.5G), ±0.2%FS/year (0.2G)
* Accuracy complies with IEC 60770 (non-linearity, hysteresis, repeatability)	
Compensation temperature range	-10~70℃ (0.5G) -10~80℃ (0.2G) Note: For range ≤20kPa, please inquire.
Temperature Coefficient of Zero	±1.5%FS (Reference 25℃, in compensation temperature range); (0.5G) ±1.0%FS (Reference 25℃, in compensation temperature range); (0.2G)
Temperature Coefficient of Full Scale	±1.5%FS (Reference 25℃, in compensation temperature range); (0.5G) ±1.0%FS (Reference 25℃, in compensation temperature range); (0.2G)
Operation Temperature	-40~80℃
Medium Temperature	-40~80℃
Storage Temperature	-40~85℃
Protection Grade	IP68(for probe)
Reverse polarity protection	No damage, circuit inoperative
Insulation resistance	>20MΩ，500VDC
Dielectric strength	<2mA 500VDC (Apply 500VAC 50Hz test voltage, no breakdown or arcing for 1 minute)

Structure Material

Code	Part	Note
S6	Probe housing	316L(default)
Ti		titanium or titanium alloy
M1	Pressure sensor	Silicon Piezoresistive,316L
M2		Silicon Piezoresistive, titanium & titanium alloy
C2U	Cable	PU polyurethane cable, external diameter (7.2±0.2) mm
C2US		PU polyurethane cable with built-in steel wire rope, outer diameter (7.6±0.2) mm
M	Filter cap	Metal Material
P		Plastic material

Structure Drawings (Unit: mm)

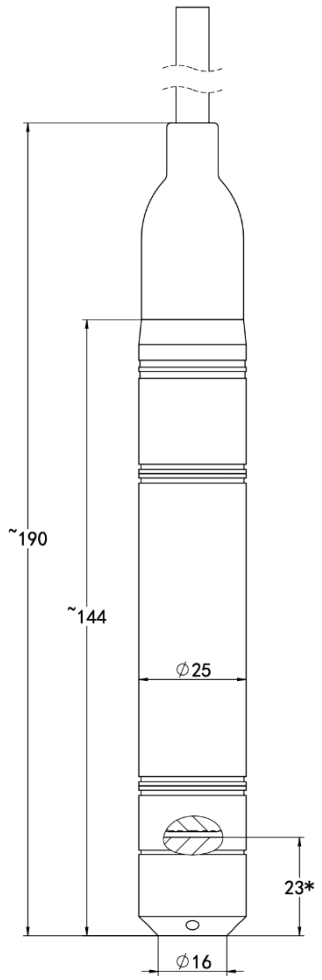

*This is the distance from the sensing diaphragm to the bottom

Electrical Interface

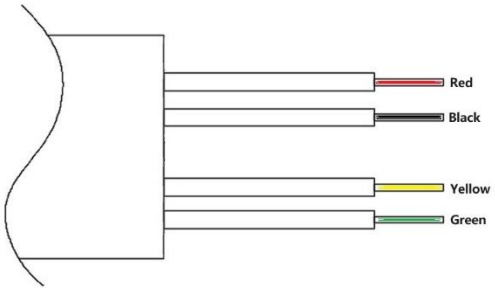

Wire color	2-wire 4 ~ 20mA	Modbus-RTU/RS485
Red	Power supply+ (+V)	Power supply+ (+V)
Black (Blue)*	Power supply- (0V/+OUT)	Power supply- (0V)
Yellow		RS485A
Green		RS485B

*The wires will be shipped in either blue or black, depending on the product marking information.

Electrical Connection

2-wire 4~20mA output

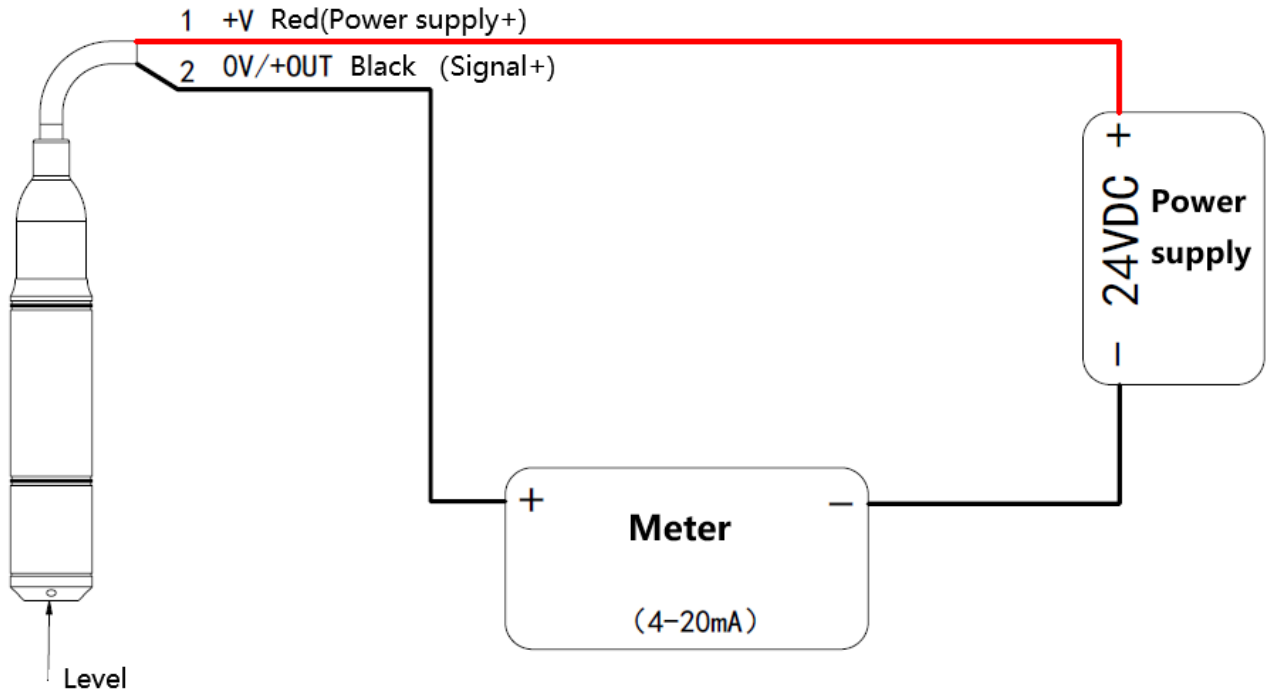

Modbus-RTU/RS485 output

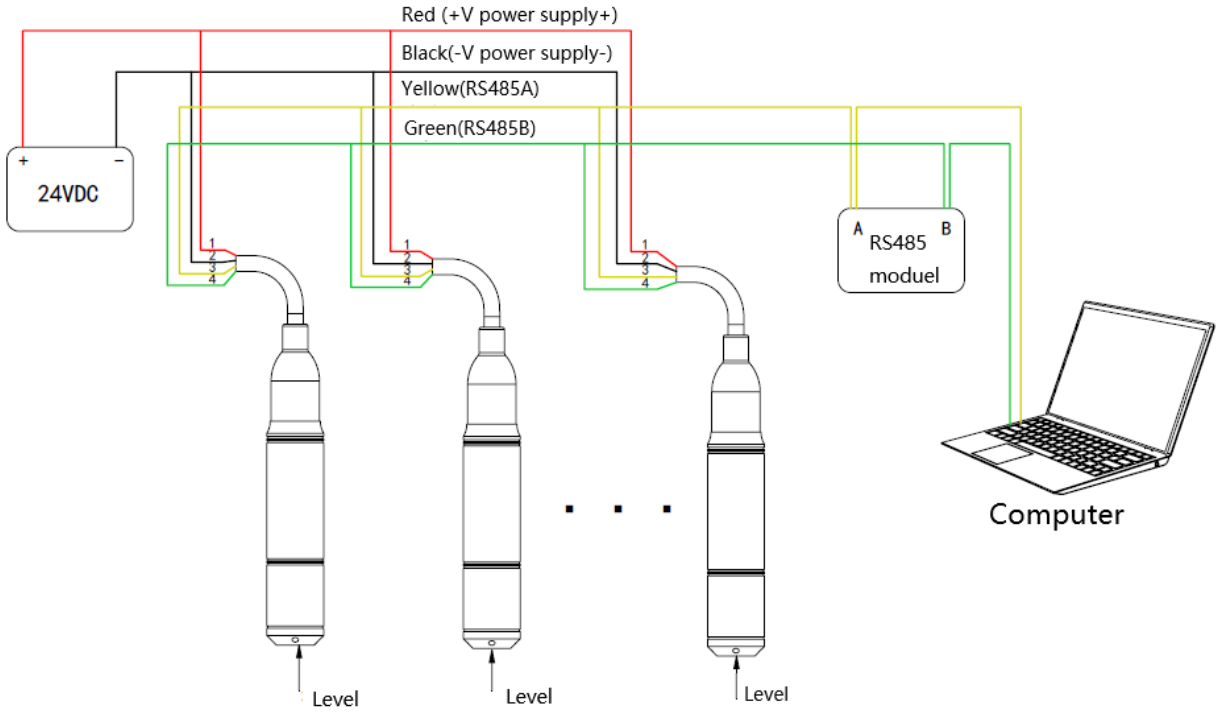

Ordering Guide

Item NO.	Type
HPM410-DP	Large Range Submersible level Transmitter

Pressure Range	Measuring Range
[0 ~ X]mH$_2$O (Ln)	X is measuring range Ln is the length of cable

Code	Output Signal
B1	(4 ~ 20)mA
B7	RS485

Code	Cable Material
C2US	PU polyurethane, with built-in steel wire rope
C2U	PU polyurethane, no steel wire rope

Code	Mounting method
N	No
W1	Threaded mounting parts
W2	Top weight
W3	Bottom weight
W4	Right-angle mounting bracket kit
W8	Clip

Code	Pressure sensor
M1	316L, silicon piezoresistive
M2	Titanium, silicon piezoresistive

Code	Probe shell material
S6	316L
Ti	Titanium or Titaniumalloy

Code	Additional Functions
QF	Factory report
J5	0.5G(by default)
J2	0.2G
W9	Waterproof and breathable junction box
FL	Lightning protection
	Other requests

eg: HPM410-DP	[0 ~ 500]mH2O (L505)	B1	C2US	N	M1	S6	J5 QF

Note: When the communication cable length exceeds 1200 meters, it is recommended to select B1 (4-20mA) output signal.

Certification Information

Factory certification	
Certification organization	CQM
Quality management system	ISO 9001:2015
Certification scope	Research, development and manufacture of pressure transmitter and temperature transmitter
Certificate No.	00223Q21711R1S

CE	
Certification organization	ECM
Certification scope	Pressure Transmitter
Electromagnetic Compatibility Directive	2014/30/EU
Certificate No.	6G241223.NHEWC83